SC80 Satcom Adapter Fixing Dimensions

Email: sales@scanstrut.com Email: usasales@scanstrut.com

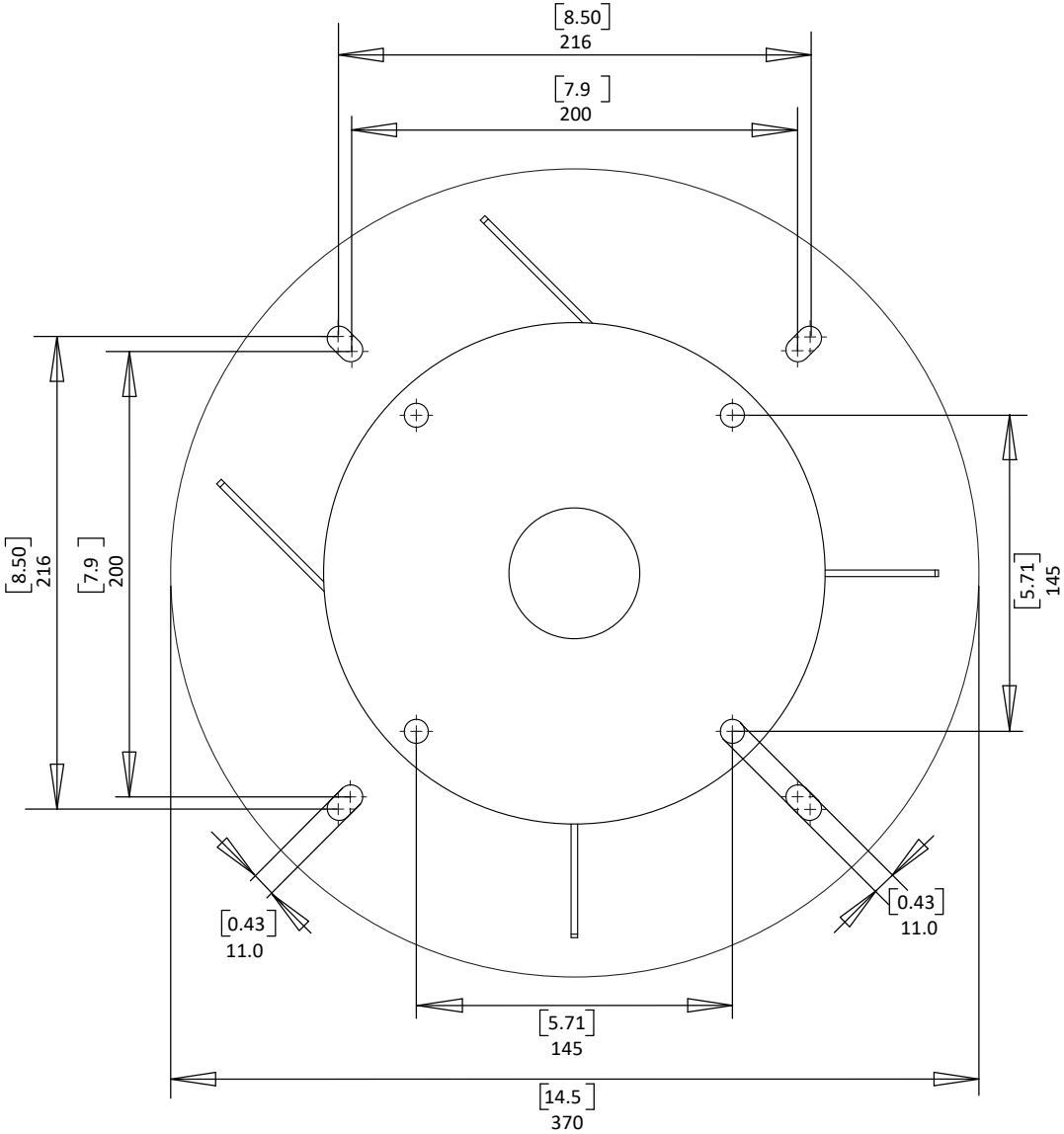

ALL SATCOM FIXING POSITIONS ARE PRE DRILLED AS DIMENSIONED

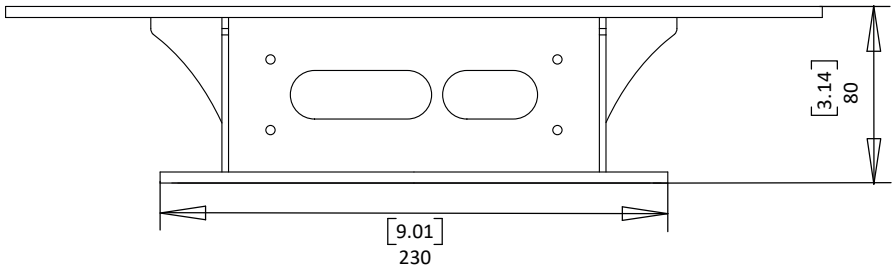

MATERIAL: 5mm STAINLESS STEEL 316
FINISH: POLISHED

SCANSTRUT